ERGO/Ex

EXPLOSION PROOF EXTRACTION ARMS

Extraction arm ERGO/Ex
– hanging version

II 2 G /D

APPLICATION

- extraction of dusts and gases in technological processes where explosion atmosphere (as a mixture of dust and gas with the air) is likely to occur

FEATURES

- versions: hanging or standing
- elements of steel sheet, duct segments and fitting pieces are of stainless steel 1.4301, according to PN-EN 100 88
- screws, washers and rivets are of stainless steel A2, according to PN-EN ISO 7089
- constructional elements of the extraction arm are connected together with copper cables — to lead the electrostatic charges away (dissipation) to the grounding system
- execution according to the ATEX 2014/34/UE

ADVANTAGES

- easy and convenient maneuvering due to the adequately adjusted brake discs in the arm joints
- meets the requirements regarding the construction of the device designed for the use in areas where Ex atmosphere is likely to occur, as testified by the Certificate of the Type Research No. 737/CW/001 issued by the Technical Inspection Authority
- higher functional comfort and safety of the personnel
- possibility of application in areas of explosion hazard

Extraction arms ERGO-L/Z/Ex are manufactured in accordance with the ATEX 2014/34/UE and carry the Certificate of the Type Research No. 737/CW/001 issued by the Technical Inspection Authority.

TECHNICAL DATA

Type	Part No.	Dimensions					Weight [kg]
		Dn [mm]	L [mm]	A [mm]	B [mm]	C [mm]	
ERGO-L/Z-2/Ex	814R21	160	2296	907	569	535	20,0
ERGO-L/Z-3/Ex	814R22	160	3156	1527	809	535	23,0
ERGO-L/Z-4/Ex	814R23	160	3766	1907	1039	535	25,5
ERGO-L/Z-2-R/Ex	814R24	160	2154	907	569	535	17,1
ERGO-L/Z-3-R/Ex	814R25	160	3014	1527	809	535	20,1
ERGO-L/Z-4-R/Ex	814R26	160	3624	1907	1039	535	22,6
ERGO-D/Z-2/Ex	814R27	200	2342	907	569	535	19,0
ERGO-D/Z-3/Ex	814R28	200	3202	1527	809	535	22,6
ERGO-D/Z-4/Ex	814R29	200	3812	1907	1039	535	25,3
ERGO-D/Z-2-R/Ex	814R30	200	2174	907	569	535	17,0
ERGO-D/Z-3-R/Ex	814R31	200	3034	1527	809	535	20,6
ERGO-D/Z-4-R/Ex	814R32	200	3644	1907	1039	535	23,4

HANGING VERSION

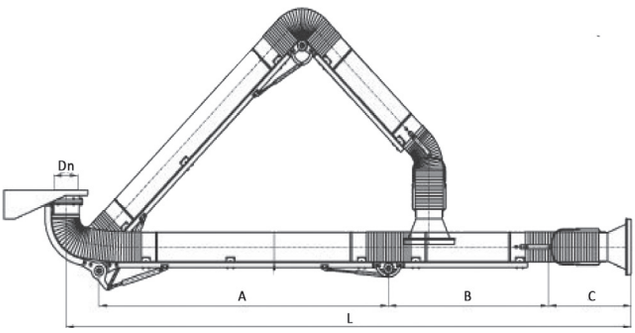

STANDING VERSION

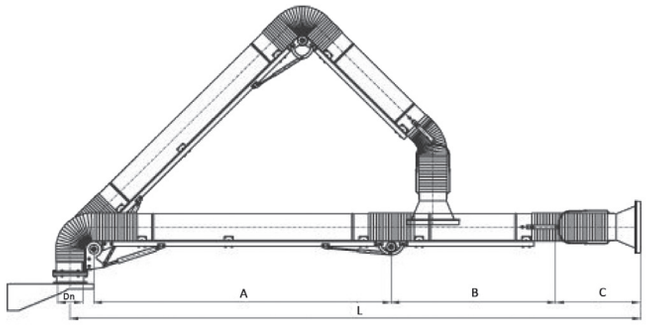

HOODS

Sort of the hood	Material	Type	Part No.	d [mm]	D [mm]	Weight [kg]
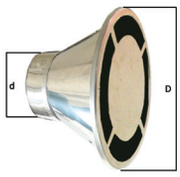	stainless steel	LS	810H35	160	336	1,3
	stainless steel	DS	810H02	200	364	1,39

WALL BRACKETS

	Type	Part No.	Dn [mm]	S [mm]	L [mm]	Weight [kg]
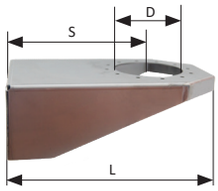	WBN-160/Ex	817W45	160	320	445	3,9
	WBN-200/Ex	817W46	200	360	510	7,9

WORKRANGES OF THE EXTRACTION ARMS ERGO/EX

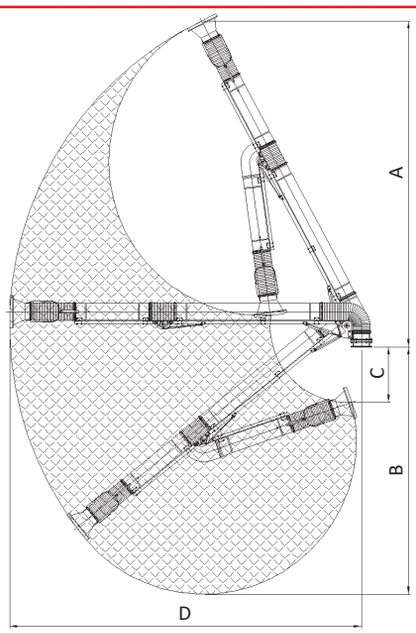

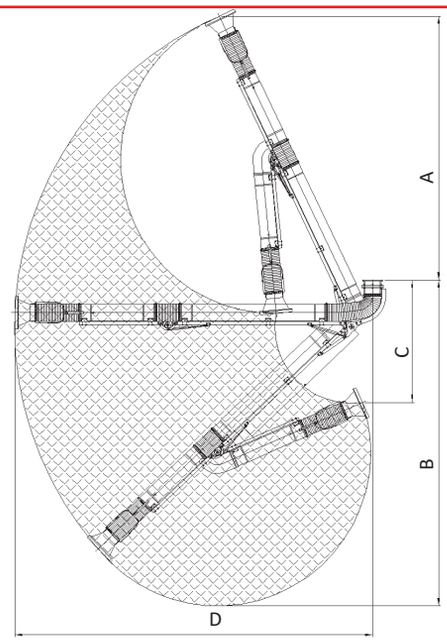

Type	A [mm]	B [mm]	C [mm]	D [mm]
ERGO-L/Z-2-R/Ex	2110	1487	122	2213
ERGO-L/Z-3-R/Ex	2835	2092	409	3033
ERGO-L/Z-4-R/Ex	3374	2561	573	3643

Type	A [mm]	B [mm]	C [mm]	D [mm]
ERGO-L/Z-2/Ex	1440	1650	800	2280
ERGO-L/Z-3/Ex	2195	2888	922	3100
ERGO-L/Z-4/Ex	2732	3372	1266	3710

Type	A [mm]	B [mm]	C [mm]	D [mm]
ERGO-D/Z-2-R/Ex	1775	1472	392	2174
ERGO-D/Z-3-R/Ex	2641	2062	785	3034
ERGO-D/Z-4-R/Ex	3239	2617	993	3644

Type	A [mm]	B [mm]	C [mm]	D [mm]
ERGO-D/Z-2/Ex	1427	2217	1013	2274
ERGO-D/Z-3/Ex	2063	2977	1246	3134
ERGO-D/Z-4/Ex	2673	3400	1423	3745

FLOW CHARTS

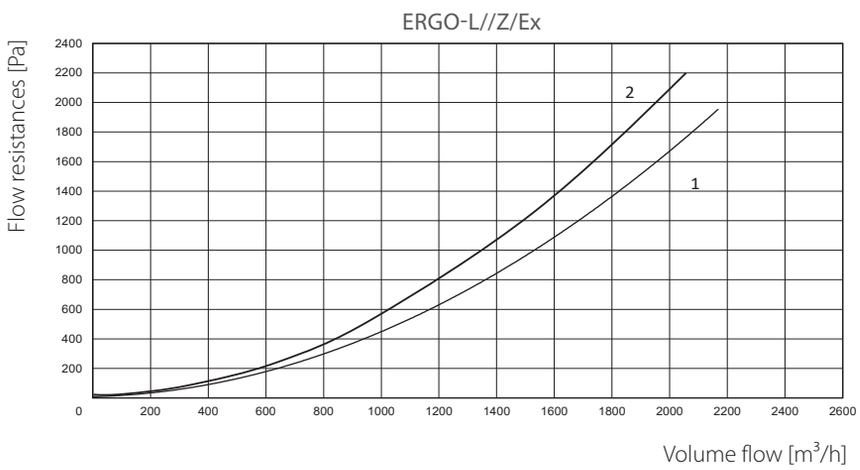
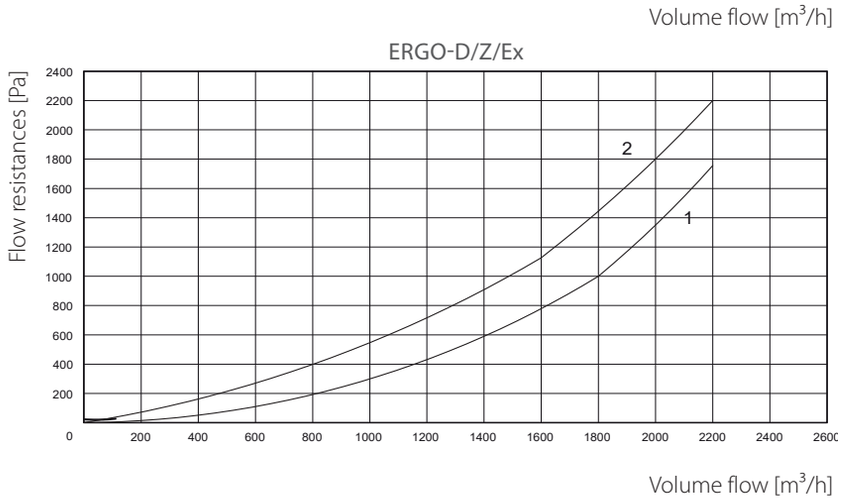
1. Straight arm
2. Bent arm